NOTES:

1. ELEMENT: CP NICKEL
2. RESISTANCE: 120.00±0.79 OHMS AT 32°F
3. OPERATING RANGE: PER TABLE I
4. MAXIMUM CONNECTION HEAD TEMPERATURE RANGE: 300°F
5. UNIT IS MARKED WITH THE FOLLOWING INFORMATION IN LOCATION SHOWN:
   CODE NO. 02009
   P/N 23700-X ← DASH NO PER SALES ORDER
   S/N [ ] ← SUPPLIED BY RdF
   RdF CORP
6. UNIT IS MARKED WITH THE FOLLOWING INFORMATION IN LOCATION SHOWN:
   RdF P/N 23700-X ← DASH NO PER SALES ORDER
   RTEN-[ ]-[ ] TW, S/N [ ] ← SUPPLIED BY RdF
   CLASSIFICATION PER TABLE I
7. ACCEPTANCE TEST PROCEDURE: T-10343

RdF CORPORATION
PROPRIETARY INFORMATION

THE DESIGN REPRESENTED BY THIS DRAWING IS THE PROPERTY OF RdF CORP. AND IS NOT TO BE DISCLOSED WITHOUT RdF APPROVAL

FOR INFORMATION ONLY

REVISIONS

ZONE	LTR	DESCRIPTION	DATE	APPROVED
	5	ECO 5641; REVISED MARKING INFO NOTE 3	821211	RRD
D4,C4 D4 D4 B2 D1,C1	A	ECO 12454, ADDED NOTES 3, 4 & 7 NOTE 5 WAS NOTE 4 "METAL STAMP IDENT TAG WITH APPROPRIATE PART NUMBER AND SERIAL NUMBER" NOTE 6 WAS NOTE 3 "ELECTRO-CHEMICALLY MARKED ON SHEATH WITHIN 3 INCHES OF TIP THE FOLLOWING: RdF P/N 23700-[ ] RTEN-[ ]-[ ]TW, S/N [ ] CLASSIFIACTION NO. DELETED ALTERNATE TERMINAL BOARD CONFIGURATION DIM "3/4-24UNS-2A" WAS "THREAD WITH THREAD RELIEF IN ACCORDANCE WITH THERMOWELL REQUIREMENTS" ADDED 7D NUMBER COLUMN TO TABLE I REDRAWN TO NEW CADD FORMAT		

TABLE I

PART NO.	CLASSIFIACTION PER MIL-T-24388 (SHIPS)	"L" DIM (INCHES)	"A" DIM (INCHES)	TEMPERATURE RANGE °F	MAX CONNECTION HEAD TEMP °F	INSERTION LENGTH (INCHES)	7D NUMBER
23700-1	RTEN-4-2TW	4.44	1.75	-40° TO 200°	300°	2.69	1201633
23700-2	RTEN-6-2TW	6.69	4.00	-40° TO 400°	300°	2.69	1201859
23700-3	RTEN-9-2TW	9.69	7.00	-40° TO 400°	300°	2.69	1202212
23700-4	RTEN-10-4TW	10.19	5.59	-40° TO 400°	300°	4.59	1202125
23700-5	RTEN-6-4TW	6.44	1.75	-40° TO 200°	300°	4.69	1202213
23700-6	RTEN-8-4TW	8.69	4.00	-40° TO 400°	300°	4.69	1201935
23700-7	RTEN-11-4TW	11.69	7.00	-40° TO 1000°	300°	4.69	1202214

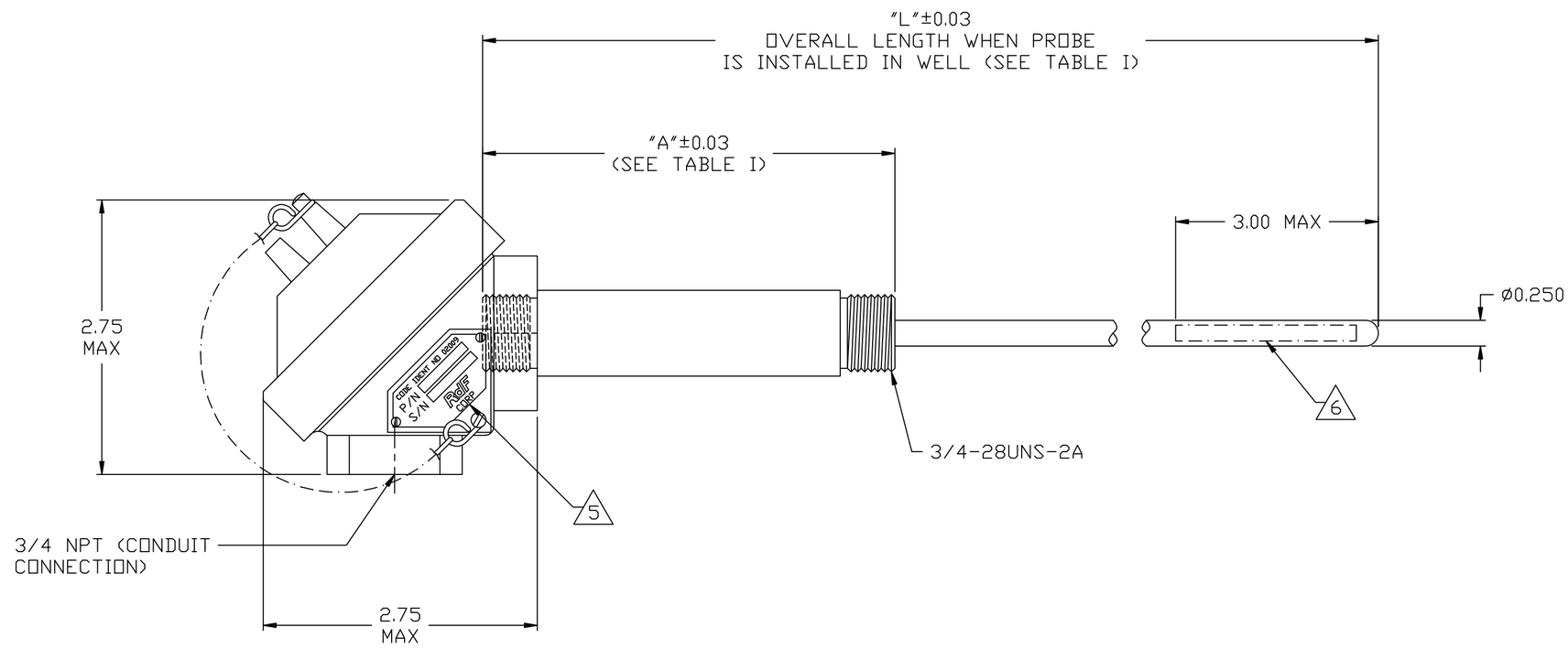

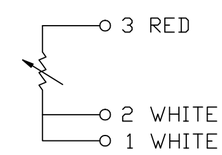

SCHEMATIC

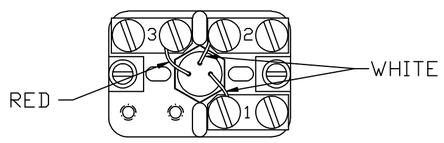

TERMINAL BOARD CONFIGURATION

-2	-1	PART OR IDENTIFYING NO.	NOMENCLATURE OR DESCRIPTION	MATERIAL OR NOTE	ITEM NO.
QTY REQ'D					

LIST OF MATERIALS

NEXT ASSY	USED ON
APPLICATION	

DRAWN	J. JONIS	790425
ENGR.	R. DESMARAIS	790427
ISSUED	K. LEITH	980714

UNLESS OTHERWISE SPECIFIED
ALL DIMENSIONS ARE IN INCHES
REMOVE ALL BURRS AND SHARP EDGES
TOLERANCES ON DIMENSIONS
.XX ± .03 ANGLES ± X
.XXX ± .005 FRACTIONAL ± X

RdF CORPORATION 23 ELM AVE HUDSON N.H. 03051-0490

TITLE
SPRING LOADED RESISTANCE TEMPERATURE DETECTOR

SIZE	FSCM NO.	DWG NO.	REV.
C	02009	23700	A

SCALE 1/1 SHEET 1 OF 1